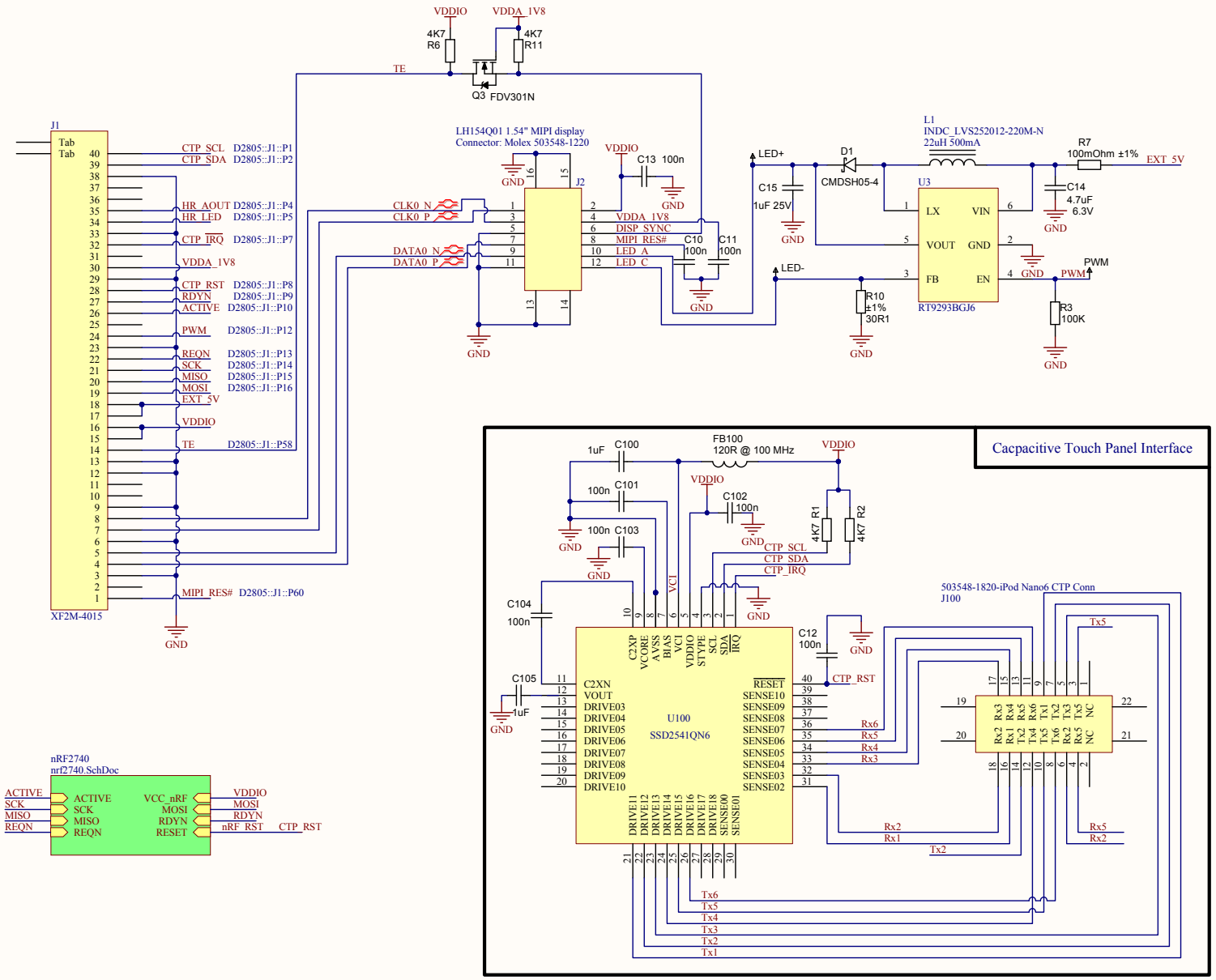

Title * LH154Q01 1.54" MIPI display with CTP Interface			* TECHTOYS CO.
Size: A3	Number:*	Revision:* DTE20150910	
Date: 2/22/2016	Time: 3:45:09 PM	Sheet*1 of * 1	
File: D:\projects\SSD28X5\AD\LH154Q01-Touch\Files_DTE11032015\LH154Q01-Touch-Rev1.SchDoc			