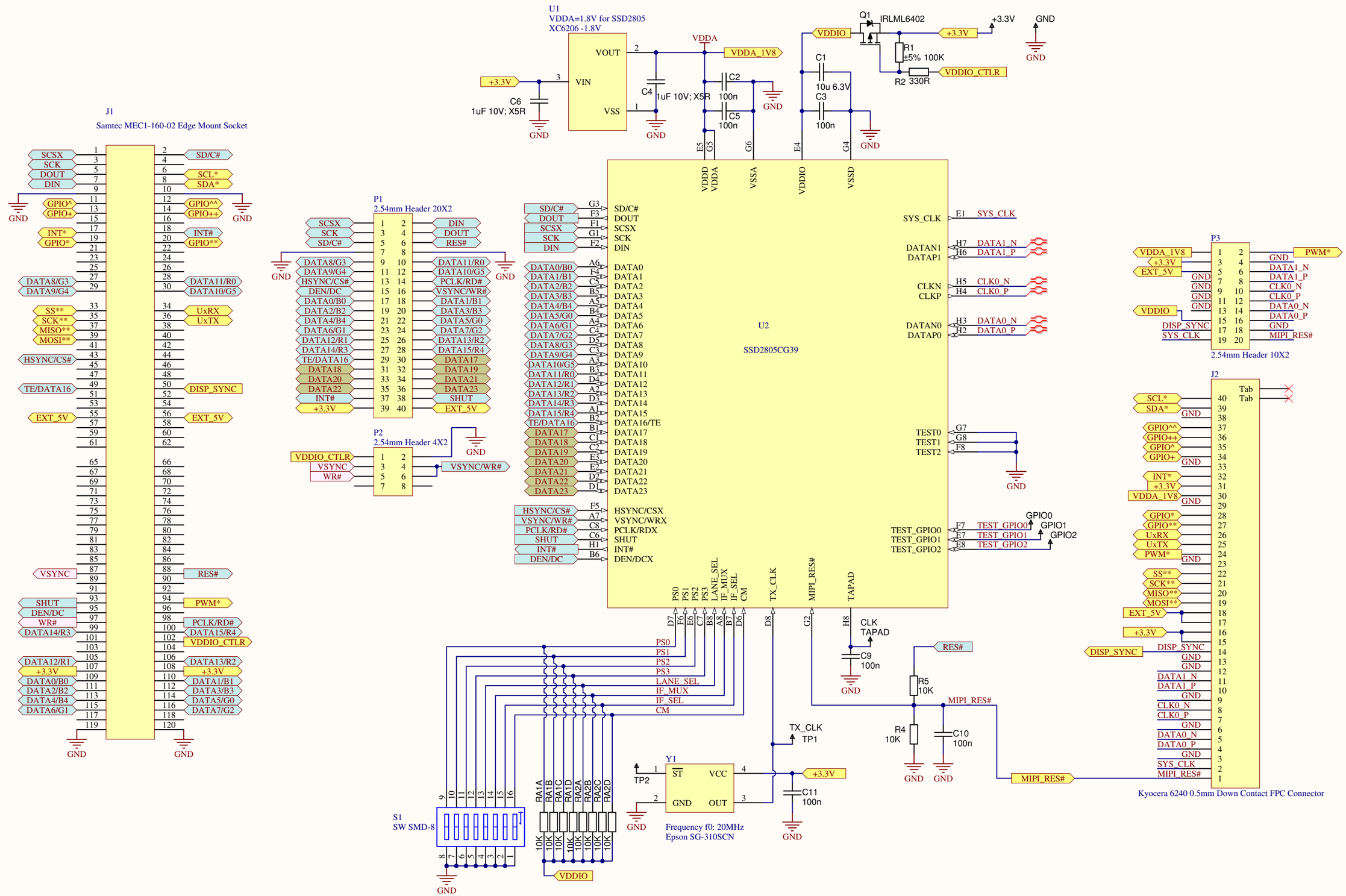

Title * Solomon Systech SSD2805 MIPI Master Bridge			TECHTOYS CO. www.TechToys.com.hk
Size: A3	Number:*	Revision:* 27092013	Altium
Date: 1/16/2014	Time: 6:30:37 PM	Sheet * 1of * 1	
File: D:\projects\SSD28X5\AD\SSD2805 MCHP\SSD2805 EVK R2_1.SchDoc			